Proc. Schl. Eng. Tokai Univ., Ser. E
39 (2014) 19-26

# A Method for Optimizing Groundwater Management

by

Afzali NASEER[*1] and Shigeo HONMA[*2]

(Received on Mar. 12, 2014 and accepted on May 15, 2014)

**Abstract**

Management of groundwater resource systems is necessary in many countries to assure a sustainable water supply at the national, regional, and community levels. Intensive pumping of groundwater significantly affects individual users, agricultural users, regional land subsidence, and environmental problems. We employ an optimization technique to search for suitable pumping rates for wells arranged in a region to obtain maximum benefits, forming an optimal management policy under hydrological constraints. A linear programming technique based on the simplex algorithm is used as the measure, and a mathematical formulation of the groundwater management problem is developed. Two quantitative examples of multiple pumping systems demonstrate the effectiveness of the technique, and an efficient computer program implementing the 2-phase simplex algorithm is provided in an Appendix.

***Keywords***: Groundwater management, Multiple-well system, Confined aquifer, Linear optimization technique, Simplex algorithm

## 1. Introduction

Groundwater plays an important role in the development and management of regional water resources. Groundwater is important in industrial usage, but it also provides a significant percentage of the irrigation and domestic use supply, both rural and urban. In many developing countries, especially Middle-Eastern countries where river and lake surface water is not available in sufficient quantity, groundwater is the major water supply resource.

In Afghanistan, the author's homeland, the static water level is decreasing yearly, especially in expanding population areas, where groundwater usage is extremely high. For example, the groundwater level in Kabul City has decreased by about 10 meters over the last decade, mainly due to unplanned pumping by private users concentrated in that area. This has resulted in huge cone depressions.

Groundwater resource system management aims at achieving certain goals through decisions and policies related to operation of the system[1)]. Goals may be established at the national, regional (provincial), community, and individual user levels. Specifically, groundwater management means determining numerical values of decision variables, including areal pump distribution, water levels in streams and lakes in contact with an aquifer, and capacity of new installations for pumping. The hydrological constraints to be satisfied include global and local water levels that should not drop below specified minimum elevations, and land subsidence that should not exceed specified values. The objective function is the total net benefit (total amount of pumping) from operating the system to be maximized.

A linear programming (LP) technique can be applied to the groundwater management problem because the relationship between pumping rates and the drawdowns are linear, even in a multiple-well pumping system[2)]. Below, we develop a mathematical formulation for groundwater management based on LP and show two quantitative examples.

## 2. Groundwater Drawdown in Multiple Well Systems

Figure1 illustrates a radially converging flow to a well fully penetrating a homogeneous confined aquifer of infinite areal extent. The partial differential equation for a steady flow to the well in a radial coordinate system takes the form[3)]

$$\frac{\partial^2 h}{\partial r^2} + \frac{1}{r}\frac{\partial h}{\partial r} = 0 \qquad (1)$$

where $h$ is the hydraulic head around the well. The boundary conditions at the well are $r = r_w$, $h = h_w$, and at some distance $r = R$, $h = H$. The distance $R$, where the drawdown is zero or

*1 Research Student, School of Engineering
*2 Professor, Department of Civil Engineering

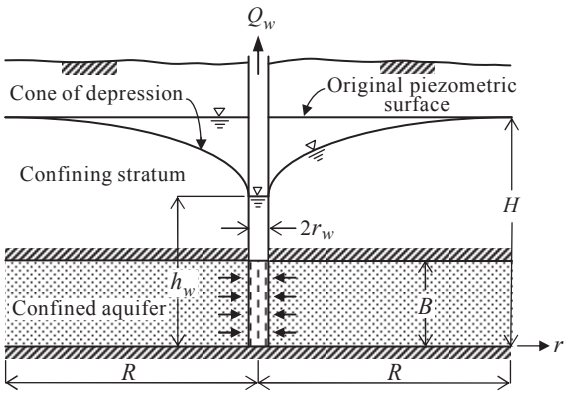


Fig.1 A well in a confined aquifer.

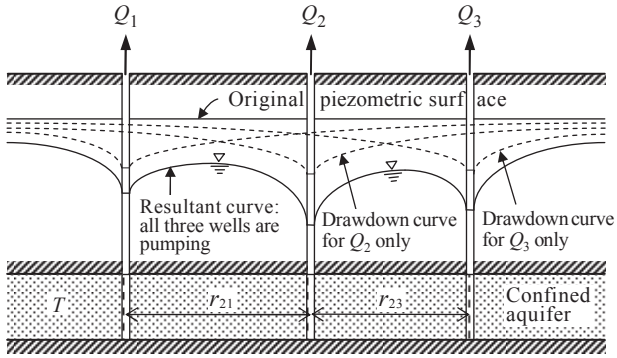


Fig.2 Composite drawdown curves by three wells.

negligible, is called the radius of the influence circle. Table1 gives a typical range of $R$ values for aquifer soil. For a constant pumping rate $Q_w$, the boundary condition at the well face is

$$2\pi rBK\frac{\partial h}{\partial r}=Q_w \tag{2}$$

where $B$ is the thickness of the aquifer, and $K$ is the hydraulic conductivity. Integrating Eq.(1) from $r$ to $R$, we obtain

$$s(r)=H(R)-h(r)=\frac{Q_w}{2\pi T}ln(\frac{R}{r}) \tag{3}$$

where $s(r)$ is the drawdown at distance $r$, and $T=KB$ is the transmissivity of the aquifer.

When wells are spaced at distances smaller than their radius of influence $R$, they affect each other's drawdown (Fig.2). Because the equation for flow in a confined aquifer is linear in $h(r)$, the principle of superposition is applicable. In a confined aquifer in which $N$ wells are operating at constant pumping rates, letting $Q_i$ denote the pumping rate at point $(x_{w,i}, y_{w,i})$, and $R_i$ the influence circle of wells, the total drawdown at location $(x_j, y_j)$ is

$$s_j=\sum_{i=1}^{N}\{(\frac{Q_i}{2\pi T})ln(\frac{R_i}{\sqrt{(x_j-x_{w,i})^2+(y_j-y_{w,i})^2}})\} \tag{4}$$

where the distance $r$ between a pumping site and observation point in Eq.(3) is $r=\sqrt{(x_j-x_{w,i})^2+(y_j-y_{w,i})^2}$ .

Table 1 Radius of influence circle[4].

| Soils | Grain size (mm) | Radius of influence circle $R$ (m) |
|---|---|---|
| Coarse Gravel | >10 | >1500 |
| Gravel | 2～10 | 500～1500 |
| Coarse sand | 0.25～2 | 100～500 |
| Fine sand | 0.05～0.25 | 10～100 |
| Silt | 0.025～0.05 | 5～10 |

We next consider the plane region in Fig.3 as a quantitative demonstration of mutual interference of drawdown by multiple well pumping. There are three wells in the region, each pumping at constant rates of $Q_1=1500$, $Q_2=2000$ and $Q_3=1500$ m$^3$/day from a subsurface confined aquifer of thickness 5 m and hydraulic conductivity $1\times10^{-3}$ m/s (transmissivity $T=5\times10^{-3}$ m$^2$/s). The objective region ($500\times250$ m) is divided into a net of 25 m meshes, and total drawdown at each location is computed from Eq.(4). The radii of influence are assumed to be $R_i=500$ m for every well. Equipotential (contour) lines are drawn by using the Lagrange-interpolation formula[5].

The resulting contour lines in Fig.3 indicate that drawdowns are mutually influenced due to simultaneous pumping by three wells.

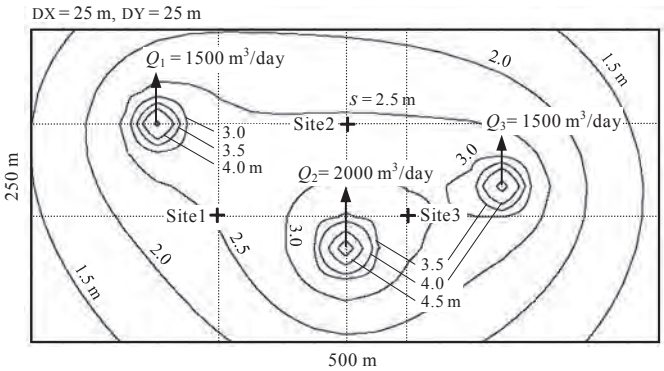


Fig.3 Cones of depression for three pumping wells.

### 3. Formulation of the Optimization Problem

Generally, the optimization problem is characterized by an objective function, stating the quantity to be maximized or minimized and its functional dependence on decision variables, and by constraints on the decision variables among which an optimum is to be found[6].

In the groundwater management problem, the objective function and constraints of the pumping rates $Q_i$ of $N$ wells

are the decision variables, and the total amount of pumping is the objective function to be maximized. The constraints demand that at $M$ locations ($x_j$, $y_j$) the drawdowns $s_j$ must be smaller than some given maximum drawdown $s_{j,\max}$ to avoid problems such as drying up neighboring wells or excessive land subsidence in the area due to pumping. Formally expressed, the problem reads:

$$\text{Objective function}: \quad Z = \sum_{i=1}^{N} Q_i \rightarrow \text{Maximize}$$

$$\text{Constraints}: \quad s_j(Q_1 \cdots Q_N) \le s_{j,\max} \quad (j = 1, \cdots, M)$$

$$Q_i \ge 0 \qquad (i = 1, \cdots\cdots, N) \tag{5}$$

The functional relationship between drawdowns and pumping rates is given by the analytical formula Eq.(4). The constraints for drawdown in Eq.(5) may be rewritten as

$$\sum_{i=1}^{N} Q_i a_{ij} \le s_{j,\max} \quad (j = 1, \cdots, M) \tag{6}$$

$$\text{with} \quad a_{ij} = \left(\frac{1}{2\pi T}\right) ln \left(\frac{R_i}{\sqrt{(x_j - x_{w,i})^2 + (y_j - y_{w,i})^2}}\right) \tag{7}$$

The matrix $a_{ij}$ is called the influence matrix and gives the change in drawdown at location $j$ if the pumping rate at well $i$ is increased by one unit. The optimization problem is linear as long as the objective function and constraints are linear, which requires an aquifer situation where the principle of superposition is applicable (i.e., linearity of the system). Therefore, the optimization model of Eq.(5) takes the form of a standard linear optimization problem that can be solved by the well-known simplex algorithm[5].

The standard form of linear optimization is given by the expressions

$$\text{Maximize} \quad Z = \sum_{i=1}^{n} p_i x_i \tag{8}$$

$$\text{Subject to} \quad \sum_{j=1}^{n} a_{ij} x_j \le b_i \quad (i = 1, \cdots, m)$$

$$b_i \ge 0$$

$$x_j \ge 0 \quad (j = 1, \cdots, n)$$

in which $Z$ is the objective function, $x_i$ are the decision variables ($i$=1,$\cdots$,$n$), and $p_i$ are the benefit coefficients. There are $m$ "less-than" constraints and $n$ non-negative constraints. The system of inequalities can be changed into a system of equations by introducing non-negative slack variables $y_i$ such that[6]

$$y_i + \sum_{j=1}^{n} a_{ij} x_j = b_i \qquad y_i \ge 0 \quad (i = 1, \cdots, m) \tag{9}$$

The system is usually written in the form of a tableau like that shown in Table2.

Table2 Simplex tableau.

Non-basis variables

| Basis variables | $x_1$ | $x_2$ | $\cdots$ | $x_i$ | $\cdots$ | $x_n$ | | |
|---|---|---|---|---|---|---|---|---|
| $y_1$ | $a_{11}$ | $a_{12}$ | $\cdots$ | $a_{1i}$ | $\cdots$ | $a_{1n}$ | $b_1$ | $b_1/a_{1i}$ |
| $\vdots$ | $\vdots$ | $\vdots$ | | $\vdots$ | | $\vdots$ | $\vdots$ | $\vdots$ |
| $y_j$ | $a_{j1}$ | $a_{j2}$ | $\cdots$ | $a_{ji}$ | $\cdots$ | $a_{jn}$ | $b_j$ | $b_j/a_{ji}$ |
| $\vdots$ | $\vdots$ | $\vdots$ | | $\vdots$ | | $\vdots$ | $\vdots$ | $\vdots$ |
| $y_m$ | $a_{m1}$ | $a_{m2}$ | $\cdots$ | $a_{mi}$ | $\cdots$ | $a_{mn}$ | $b_m$ | $b_m/a_{mi}$ |
| | $p_1$ | $p_2$ | $\cdots$ | $p_i$ | $\cdots$ | $p_n$ | | |

The system of linear equations (9) contains $n$+$m$ non-negative variables appearing in $m$ equations, so the system is generally undetermined. The set of equations forms a feasible region in $n$+$m$ dimensional space, and is a convex set, bounded by planes. The optimum solution is at a corner of the feasible set. By setting $n$ out of $n$+$m$ variables to 0, Eqs.(9) can be solved for the remaining $m$ variables. These $m$ variables are called basis variables, and the $n$ variables set to 0 are called non-basis variables. The corner points of the feasible region are contained in the solutions obtained by making all possible choices of $n$ non-basis variables out of $n$+$m$ variables and then solving the system of Eqs. (9).

Not all solutions are feasible, but the computation starts with a feasible solution, then exchanges one basis and one non-basis variable at a time. In the exchange process it is necessary to stay on the edge of the feasible region and move along the edge that gives the largest increase in the objective function. This is done by exchanging the non-basis variable that gives the largest increase in $Z$. The largest positive coefficient in the objective function indicates the non-basis variable to be exchanged[6].

The tableau in Table 2 shows the variables to be exchanged: The column with the largest $p_i$ determines $x_i$ (the pivot column), and the last column ($b_j$) is divided by the elements of the pivot column. The smallest non-zero positive coefficient resulting from this operation indicates $y_j$ (the pivot row).

For an arbitrary pivot element $a_{ij}$ the transformation step may be expressed in tableau language by the following rules[5]:

1) Divide the pivot column by the pivot element, leaving the pivot element unchanged.
2) Divide the pivot row by the pivot element and multiply by −1, leaving the pivot element unchanged.
3) Replace the pivot element by its inverse.
4) Replace all other elements of the tableau according to the following rules:

$a_{kl} \rightarrow a_{kl} - a_{kj} a_{il} / a_{ij}$, $b_k \rightarrow b_k - a_{kj} b_i / a_{ij}$ and $p_l$ by $p_l - a_{il} p_j / a_{ij}$.

The exchange process is repeated until all coefficients of the last row, meaning all $p_i$ of the transformed objective function, are negative. If no pivot element can be found in an iteration step before arriving at the solution, this indicates that the problem has no solution.

## 4. Application of the Simplex Algorithm to Groundwater Management

Since aquifer management problems are not usually given in standard linear optimization form, some modifications are required. If there are "larger-than or equality" constraints, the method is decomposed into two phases. The first phase starts from a non-feasible corner point and then finds a feasible solution. In the second phase, the standard procedure is performed. The "larger-than" constraints are modified to equality constraints by subtracting slack variables such that

$$-z_i + \sum_{j=1}^{n} a_{k(i),j} x_j = b_{k(i)} \qquad z_i \geq 0 \quad (i = 1, \cdots, l) \tag{10}$$

where $k(i)$ are the line numbers of the $l$ "larger-than" constraints. In the first phase, the following objective function is used:

$$Z' = \sum_{i=1}^{l} (-z_i) \quad \rightarrow \quad \text{Maximize} \tag{11}$$

Here, $z_i$ are all artificial variables, meaning slack variables with coefficients of −1.

Equality constraints can be treated formally in the same way as "larger-than" constraints. Substituting Eqs.(10) into Eq.(11), we obtain

$$Z' = -\sum_{i=1}^{l} \left( \sum_{j=1}^{n} a_{k(i),j} x_j \right) + \sum_{i=1}^{l} b_{k(i)} \quad \rightarrow \quad \text{Maximize} \tag{12}$$

where $k(i)$ are the line numbers of the $l$ larger-than and equality constraints. As the last term in Eq.(12) is a constant, maximizing $Z'$ is equivalent to maximizing the first term, leading to the new objective function

$$-Z' = -\sum_{i=1}^{l} \left( \sum_{j=1}^{n} a_{k(i),j} x_j \right) \quad \rightarrow \quad \text{Maximize} \tag{13}$$

In the first phase, $-Z'$ is maximized by exchanging variables in the standard manner, and when all coefficients of $-Z'$ have become less than or equal to 0, the second phase begins[5].

The general two-phase simplex algorithm is given by Kuester and Mize[7] as a FORTRAN program, which is rewritten here as a Visual BASIC program in an Appendix.

As an application of LP to the groundwater management problem, the multiple well pumping system shown in Fig.3 is considered. The locations of the three pumping wells are,

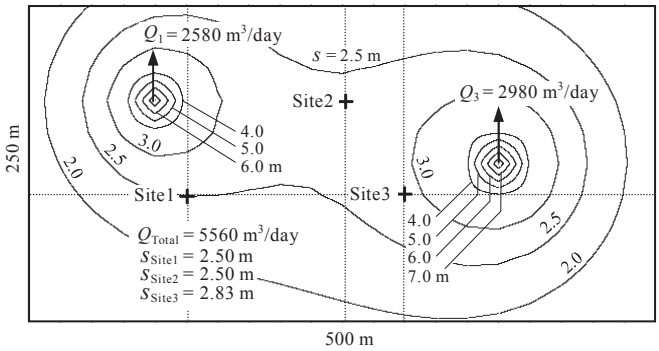


Fig.4 Cones of depression for optimum pumping rates.

taking the top-left corner of the region as the coordinate origin, $(x_{w,1}, y_{w,1}) = (100\,\text{m}, 75\,\text{m})$, $(x_{w,2}, y_{w,2}) = (250\,\text{m}, 175\,\text{m})$ and $(x_{w,3}, y_{w,3}) = (375\,\text{m}, 125\,\text{m})$. At three sites, Site1 (150 m ,150 m), Site2 (250 m ,75 m) and Site3 (300 m ,150 m), maximum allowable drawdowns are prescribed as $s_1 \leq 2.5\,\text{m}$, $s_2 \leq 2.5\,\text{m}$ and $s_3 \leq 3.0\,\text{m}$. The objective is now to pump as much water as possible without violating the constraints. If the data given above are substituted into Eqs.(7) and (8), the optimization problem is expressed by the tableau shown in Table3.

Table 3 Simplex tableau for multiple pumping.

| | $Q_1$ | $Q_2$ | $Q_3$ | $b$ | Type |
|---|---|---|---|---|---|
| $y_1$ | 54.57 | 50.29 | 25.23 | 2.5 | < |
| $y_2$ | 38.34 | 51.26 | 39.25 | 2.5 | < |
| $y_3$ | 27.09 | 69.79 | 58.74 | 3.0 | < |
| $Z$ | 1 | 1 | 1 | | |

The program listed in the Appendix yields optimum pumping rates of $Q_1 = 2580\,\text{m}^3/\text{day}$, $Q_2 = 0$ and $Q_3 = 2980\,\text{m}^3/\text{day}$. The cones of depression under the optimum pumping operation are depicted in Fig.4.

The next demonstration is a combination of calculating piezometric heads and optimizing pumping rates. Given an aquifer as shown in Fig.5, piezometric heads and the most efficient rate of pumping are calculated by LP. There are three pumping wells in the area, and piezometer heads in cells 1 and 2 are fixed and given by the river water level $h_1 = h_{r1} = 50\,\text{m}$, $h_2 = h_{r2} = 45\,\text{m}$.

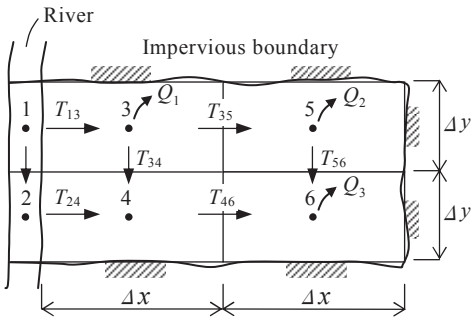


Fig.5 Aquifer and cells used in the analysis.

In cells 3 and 4 the groundwater levels must not drop below $h_{\min 3} = 47.5$ m and $h_{\min 4} = 42.5$ m, respectively. The local transmissivities of the cells are $T_1 = T_2 = T_3 = T_4 = 0.05\,\mathrm{m^2/s}$ and $T_5 = T_6 = 0.01\,\mathrm{m^2/s}$. The natural replenishment rate in the area is $N = 1 \times 10^{-8}\,\mathrm{m^3/s/m^2}$, and the cell dimensions are $\Delta x = 2000$ m and $\Delta y = 1000$ m. The pumping rates at the three wells are to be determined such that the benefit

$$Z = p_1 Q_1 + p_2 Q_2 + p_3 Q_3 \tag{14}$$

becomes maximal. The benefit coefficients have values $p_1 = p_2 = 1$ and $p_3 = 1.2$ units/($\mathrm{m^3/s}$). Also, a minimum demand of $D = 0.1\,\mathrm{m^3/s}$ must be satisfied.

The constraints are expressed by the following set of equations and inequalities.

$$h_1 = h_{r1}\,,\ h_2 = h_{r2}\,,\ \ h_3 \geq h_{\min 3}\,,\ h_4 \geq h_{\min 4} \qquad (15a,b,c,d)$$

$$2(h_1 - h_3)\frac{\Delta y}{\Delta x}T_{13} + (h_5 - h_3)\frac{\Delta y}{\Delta x}T_{35} + (h_4 - h_3)\frac{\Delta x}{\Delta y}T_{34} + N\Delta x\Delta y - Q_1 = 0 \tag{16}$$

$$(h_3 - h_4)\frac{\Delta x}{\Delta y}T_{34} + 2(h_2 - h_4)\frac{\Delta y}{\Delta x}T_{24} + (h_6 - h_4)\frac{\Delta y}{\Delta x}T_{46} + N\Delta x\Delta y = 0 \tag{17}$$

$$(h_3 - h_5)\frac{\Delta y}{\Delta x}T_{35} + (h_6 - h_5)\frac{\Delta x}{\Delta y}T_{56} + N\Delta x\Delta y - Q_2 = 0 \tag{18}$$

$$(h_4 - h_6)\frac{\Delta y}{\Delta x}T_{46} + (h_5 - h_6)\frac{\Delta x}{\Delta y}T_{56} + N\Delta x\Delta y - Q_3 = 0 \tag{19}$$

$$Q_1 + Q_2 + Q_3 \geq D\ ,\ Q_1 \geq 0\,,\ Q_2 \geq 0\,,\ Q_3 \geq 0 \qquad (20a,b,c,d)$$

Input data and the solution for this problem are shown in Fig.7 in the Appendix. It is concluded that the wells must be operated at pumping rates $Q_1 = 0.10\,\mathrm{m^3/s}$, $Q_2 = 0$, $Q_3 = 0.049\,\mathrm{m^3/s}$. Figure 6 presents the resulting distribution of piezometric heads calculated by the iterative alternating direction implicit-finite difference method[8] from which the aspect of subsurface flow due to the optimum pumping operation is clearly shown.

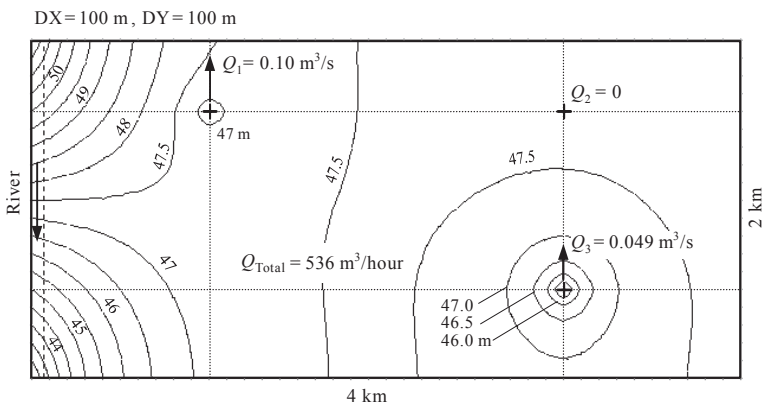


Fig.6 Equipotential lines for optimal pumping rates.

The optimization technique developed in this paper is applicable not only to groundwater management problem but also to petroleum reservoir management to determine optimum pumping rates for efficient operation.

## 5. Conclusion

An LP technique was applied to the groundwater management problem to find optimum pumping operations under hydrological constraints. The major conclusions obtained through this study are as follows:

1) As the equation for flow in a confined aquifer is linear in drawdown of a hydraulic head, the principle of superposition is applicable. Therefore, the overall drawdown in a multiple well pumping system can be controlled by the linear programming technique.

2) The optimization process is performed by using a simplex algorithm directly applied to the groundwater management problem with some modifications suitable for practical application. The 2-phase simplex algorithm is provided as a computer program to be employed in groundwater resource system planning and analysis.

3) The optimization technique developed in this paper is applicable not only to the groundwater management problem but also to petroleum reservoir management to determine optimum pumping operations.

## References

1) D.P. Loucks, J.R. Stedinger and D.A. Haith : *Water Resources System Planning and Analysis* (Prentice Hall, 1981) p.45-83.
2) J. Bear : *Hydraulics of Groundwater* (Mc-Graw Hill, 1979) p.491-512.
3) R.J. Freeze and J.A. Cherry : *Groundwater* (Prentice Hall, 1979) p.304-332.
4) The Japanese Geotechnical Society : *Soil Investigation Methods* (S. Honma contributed a part, 1995) Chap.7, Groundwater Investigation.
5) W. Kinzelbach : *Groundwater Modeling*, Vol.25 Developments in Water Science (1986) p.168-187.
6) D.G. Luenberger : *Introduction to Linear and Nonlinear Programming* (Addison-Wesley, 1973), p.27-63.
7) J.L. Kuester and, J.H. Mize : *Optimization Techniques with* FORTRAN (Mc-Graw Hill, 1982), p.500.
8) B. Carnahan, H.A. Luther and J.O. Wilkes : *Applied Numerical Methods* (John Wiley & Sons, 1969) p.440-455.

## Appendix

A computer program for the simplex algorithm used in this paper is listed below. The program was originally given by Kuester and Mize[7] in the FORTRAN language and was converted to VB by the authors. Variable m indicates the number of variables to be solved, and n is the number of constraints (excluding positivity constraints). Coefficients of constraints and the right sides of constraints are stored in arrays a and b. Coefficients of the objective function are in p.

```
Dim fname, title, sg As String
Dim n1, m, n, i, j, ni, ip, it, kc, kr, r1, io, _
    i1(50), i2(50) As Integer
Dim ls, cj, ra, pv, z, sa, x, a(50,50), b(50), bp(50), _
    p(50), p1(50), p2(50) As Single
-----------------------------------------------
Private Sub Command2_Click()

         ni = 0
         For i = 1 To m
             If bp(i) < 0 Then ni = ni + 1
         Next i

'   Generate Objective Function for Phase 1
         For j = 1 To n
             p1(j) = 0
             For i = 1 To m
                 If bp(i) < 0 Then p1(j) = _
                 p1(j) + a(i, j)
             Next i
         Next j
         For i = 1 To m
             bp(i) = 0
         Next i
         ip = 1
         it = 0
         Picture3.Print " ITERATION    VAR IN _
         VAR OUT     OBJ  FUNCTION": Print

'   Main Program
         For j = 1 To n
             p2(j) = p(j)
         Next j

'   Determine Pivot-Column
flag0:   ls = 0
         kc = 0
         On ip GoTo flag1, flag2
flag1:   If ni <= 0 Then GoTo flag14
flag2:   For j = 1 To n

'   Ignore Artificial Variables
             If i2(j) = 0 Then GoTo flag5
             On ip GoTo flag3, flag4
flag3:       If p1(j) <= ls Then GoTo flag5
             kc = j
             ls = p1(j)
             GoTo flag5
flag4:       If p2(j) <= ls Then GoTo flag5
             kc = j
             ls = p2(j)
flag5:   Next j
         If kc <= 0 Then GoTo flag14

'   Determine Pivot-Row
         kr = 0
         cj = ls
         ls = 1E+20
         For i = 1 To m
             If a(i, kc) <= 0 Then GoTo flag6
             ra = b(i) / a(i, kc)
             If ra - ls >= 0 Then GoTo flag6
             ls = ra
             kr = i
flag6:   Next i
         If kr > 0 Then GoTo flag7
         Picture3.Print: Print " VARIABLE "; _
         i2(kc); "  UNBOUNDED": Print
         End
flag7:

'   Transform
'   Divide by Pivot
         pv = a(kr, kc)
         For j = 1 To n
             a(kr, j) = a(kr, j) / pv
         Next j
         b(kr) = b(kr) / pv
         For i = 1 To m
             If i - kr = 0 Then GoTo flag9
             b(i) = b(i) - b(kr) * a(i, kc)
             For j = 1 To n
                 If j - kc = 0 Then GoTo flag8
                 a(i, j) = a(i, j) - a(kr, j) _
                           * a(i, kc)
flag8:       Next j
flag9:   Next i

         For i = 1 To m
             a(i, kc) = -a(i, kc) / pv
         Next i
         a(kr, kc) = 1 / pv

'   Interchange Basis and Non-Basis Variables
         r1 = i2(kc)
         i2(kc) = i1(kr)
         i1(kr) = r1
         ls = p(kc)
         p(kc) = bp(kr)
         bp(kr) = ls
         it = it + 1
         If i2(kc) = 0 Then ni = ni - 1

'   Compute Objective Function
         z = 0
         For i = 1 To m
             z = z + bp(i) * b(i)
         Next i
         On ip GoTo flag10, flag11
flag10:  sa = p2(kc)
         For j = 1 To n
             p2(j) = p2(j) - sa * a(kr, j)
             p1(j) = p1(j) - cj * a(kr, j)
         Next j
         p2(kc) = -sa / pv
         p1(kc) = -cj / pv
         GoTo flag12
flag11:  For j = 1 To n
             p2(j) = p2(j) - cj * a(kr, j)
         Next j
         p2(kc) = -cj / pv

'   Check for Essential Zeros
flag12:  For i = 1 To m
             For j = 1 To n
                 x = a(i, j)
                 If Abs(x) - 0.0000001 > 0 _
                 Then GoTo flag13
                 a(i, j) = 0
flag13:      Next j
         Next i

'   Iteration Log
         Picture3.Print Tab(10); it; Tab(20); _
         i1(kr); Tab(30); i2(kc); Tab(40); z
         GoTo flag0

flag14:
         If ip - 1 > 0 Then GoTo flag17
         ip = 2
```

```
        If ni <= 0 Then GoTo flag15
        Picture3.Print
        Picture3.Print " SOLUTION INFEASIBLE": Print
        GoTo flag16
flag15: Picture3.Print
        Picture3.Print " SOLUTON FEASIBLE": Print
        GoTo flag0
flag16: GoTo Terminate

'   Output Routine
flag17: Picture3.Print
        Picture3.Print " TOTAL NUMBER OF ITERATIONS
        "; it: Print
        Picture3.Print " VALUE OF OBJECIVE FUNCTION
        "; z
        Picture3.Print
        Picture3.Print " VARIABLE NR.      VALUE":
        Print
        io = 0
        For i = 1 To m
            If i1(i) <= 0 Or i1(i) >= 100 Then GoTo
            flag18
            Picture3.Print Tab(10); i1(i); Tab(20);
            b(i)
            io = io + 1
flag18: Next i
        If io < n1 Then Picture3.Print: Picture3.Print
            " ALL OTHER ORIGINAL VARIABLES ARE ZERO."
Terminate:
End Sub
```

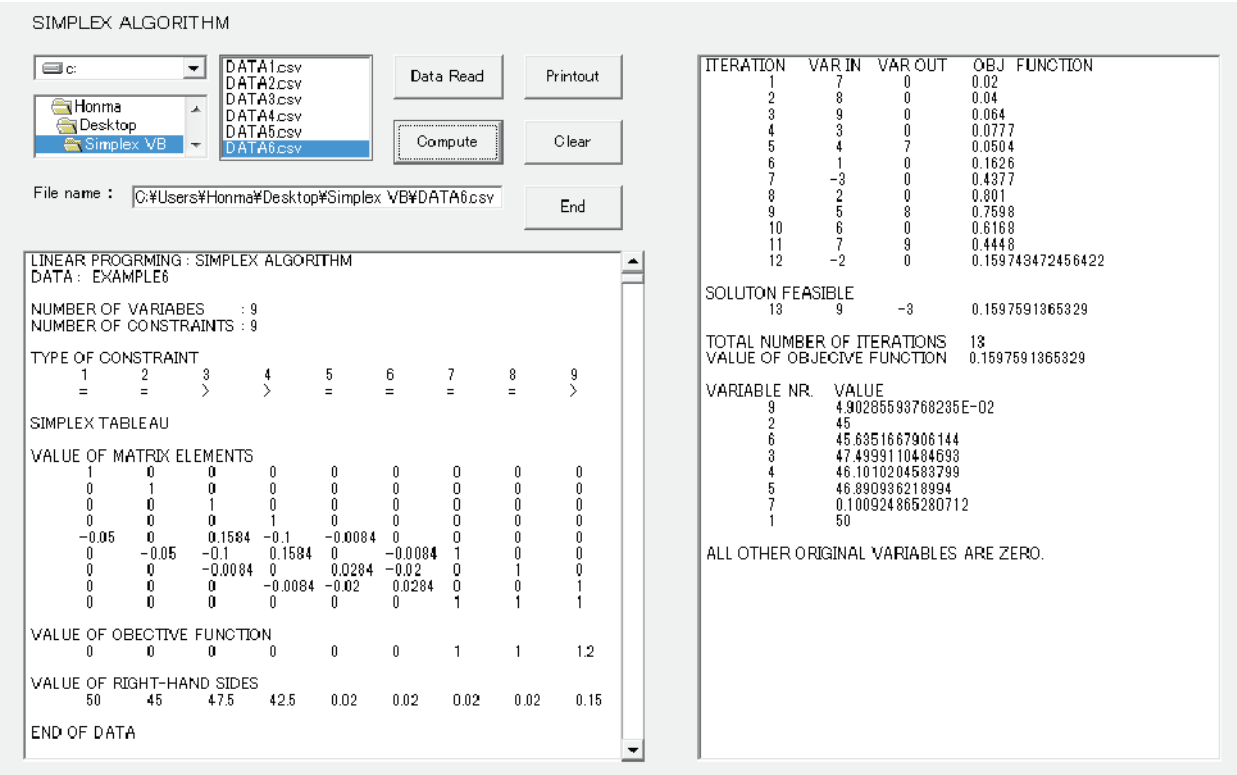


Fig.7 VB-form for linear programming by the simplex algorithm.